MERCATOR
NAVIGATING SUCCESS

Project Name: _____

Location: _____

Item #: _____ Qty: _____

Model: _____

MI500H
500 lb Modular Ice Machine Head 30" Wide - Half

MODEL: ☐ MI500H

SPECIAL FEATURES

- Stainless steel, black trim exterior
- Air-cooled compressor
- Programmable, user-friendly digital controls
- Digitally displays ice machine status
- Automatic cleaning cycle and bin overflow prevention
- Power from unit also illuminates ice storage bin internal LED light (MI470B / MI580B - sold separately)
- Hinged front panel for easy maintenance
- Stackable for increased ice production (optional adapter is required)
- Energy Star approved

TECHNICAL DATA

MODEL	DIMENSIONS	DAILY ICE PRODUCTION (70°F Air / 50°F Water)	ICE BIN STORAGE COMPATIBILITY	AMP DRAW (Nominal / Max)	REFRIGERANT / CHARGE SIZE	ELECTRICAL	NET WEIGHT (LBS)	GROSS WEIGHT (LBS)
MI500H	30" x 24 6/10" x 21" (762 x 625 x 532 mm)	513 lbs (233 kg)	MI470B / MI580B	7A / 9.3A	R-404a 24.5oz (695g)	115V / 60 Hz / 1PH	130 lbs (59 kg)	148 lbs (67 kg)

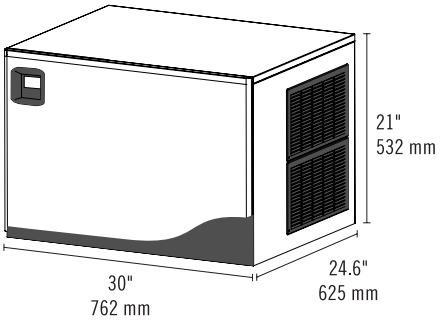

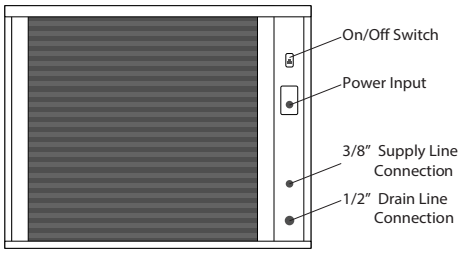

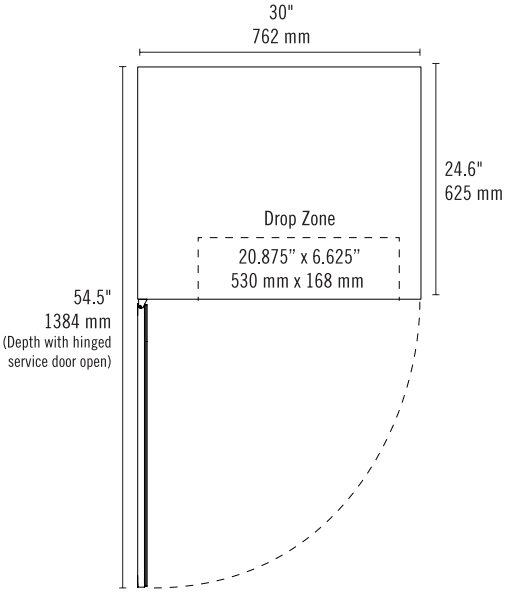

NEMA 5-15P

Intertek

Intertek

Available in export voltages and plug types.

WARNING: This product can expose you to chemicals including lead, which are known to the State of California to cause cancer and birth defects or other reproductive harm. For more information, go to www.p65warnings.ca.gov.

© 2025 MERCATOR